File Number	Piece Number

File Number	TYS-NST5S-A1-IDS
Stage Mark	FM
Page	13

NST5S-A1 Star Tracker IDS

		Signature
Prepared by:	Fu Shuxin	
Proofread by:	Chai Yin	
Reviewed by:	Xiao Mingguo	
Standardization Checked by:	Dong Pengfei	
Approved by:	Wang Haijun	

TY-Space Technology (Beijing) Ltd.

IDS 1: Performance Index

	File Number	TYS-NST5S-A1-IDS	Page 1 of 13			
	Sub-System Name					
	Device Name	NST5S-A1 Star Tracker	Stage Mark			
	Device Code				FM	

Parameters	**Specifications**
Attitude Accuracy	Pointing: 1″ (3σ) Roll: 15″ (3σ)
Dynamic Performance	@0.1°/s: 2″ (Pointing, 3σ); 15″ (Roll, 3σ); @0.5°/s: 5″ (Pointing, 3σ); 35″ (Roll, 3σ); @1.0°/s: 7″ (Pointing, 3σ); 50″ (Roll, 3σ); @3°/s: Trackable
Data Validity Rate	>98%@ 0.5°/s; >96%@0.5°/s ~1.5°/s;
Update Rate	≥10Hz
Acquisition Rate	Max. ≤2s
Start-up Time	Better than 5s
Exclusion Angle	Sun: better than 35°; Earth: better than 25°
Time Scale Accuracy	Better than 0.1ms @ synchronization pulse (SYNC pulse)
Communication	RS422
Quaternions Continuity	The scalar of quaternion: non-negative
Life Time	7 years @1000km Orbit
Reliability	≥0.98 @ the end of 7-year running

Edited (Date):			
Signed (Date):	Mark		Signature, Date

IDS 2: Mechanical Characteristics

		File Number	TYS-NST5S-A1-IDS		Page 2 of 13			
		Sub-System Name						
		Device Name	NST5S-A1 Star Tracker		Stage Mark			
		Device Code					FM	
Device Weight: 420±20g		Device Count: 1				√		
Mechanical Characteristics	Envelope Size (mm)	(78.2±1)×(78±1)	Height: 168±2			√		
	CM Position (mm)	X: 0±2	Y: 34±2	Z: 49±2		√		
	Inertia at CM (kg.mm^2)	P_X = 784±3	P_Y = 792±3	P_Z = 282±3		√		
					MEAS	CALC	EST	
Mounting Characteristics	Mounting Hole Count: 4	Mounting Hole Dimensions (Tolerance) (mm): Φ4.3±0.1		Material: 2A12-T4	Determination Method (√)			
	Mounting Contact Area (mm^2): 2183			Note: The determination method refers to the way to determine the mechanical characteristics of the device. MEAS: Measurement CALC: Calculation EST: Estimation				
	Mounting Surface Flatness: 0.1mm/(100mm×100mm)							
	Mounting Surface Roughness Ra (μm): 3.2							
	Mounting Surface Treatment: Conductive Treatment							

Parameter relationship diagram (should indicate coordinate system relative orientation, CM position, device body dimensions, mounting surface location, etc.):

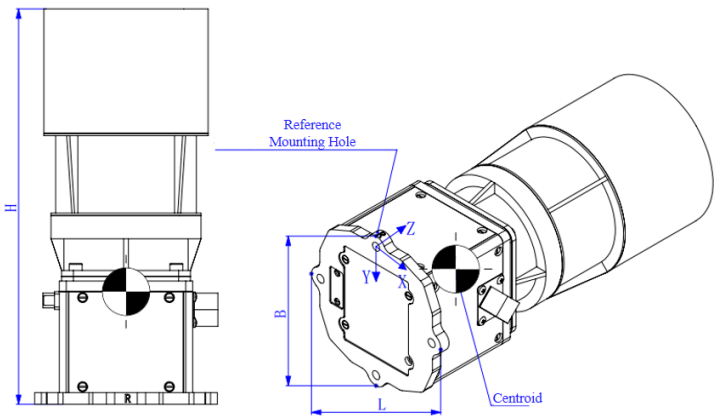

Note: The coordinate origin is located at the center of the reference mounting hole on the mounting surface (see *IDS 3: Instrument Diagram*).

Edited (Date):			
Signed (Date):	Mark		Signature, Date

IDS 3: Instrument Diagram

	File Number	TYS-NST5S-A1-IDS	Page 3 of 13			
	Sub-System Name					
	Device Name	NST5S-A1 Star Tracker	Stage Mark			
	Device Code				FM	

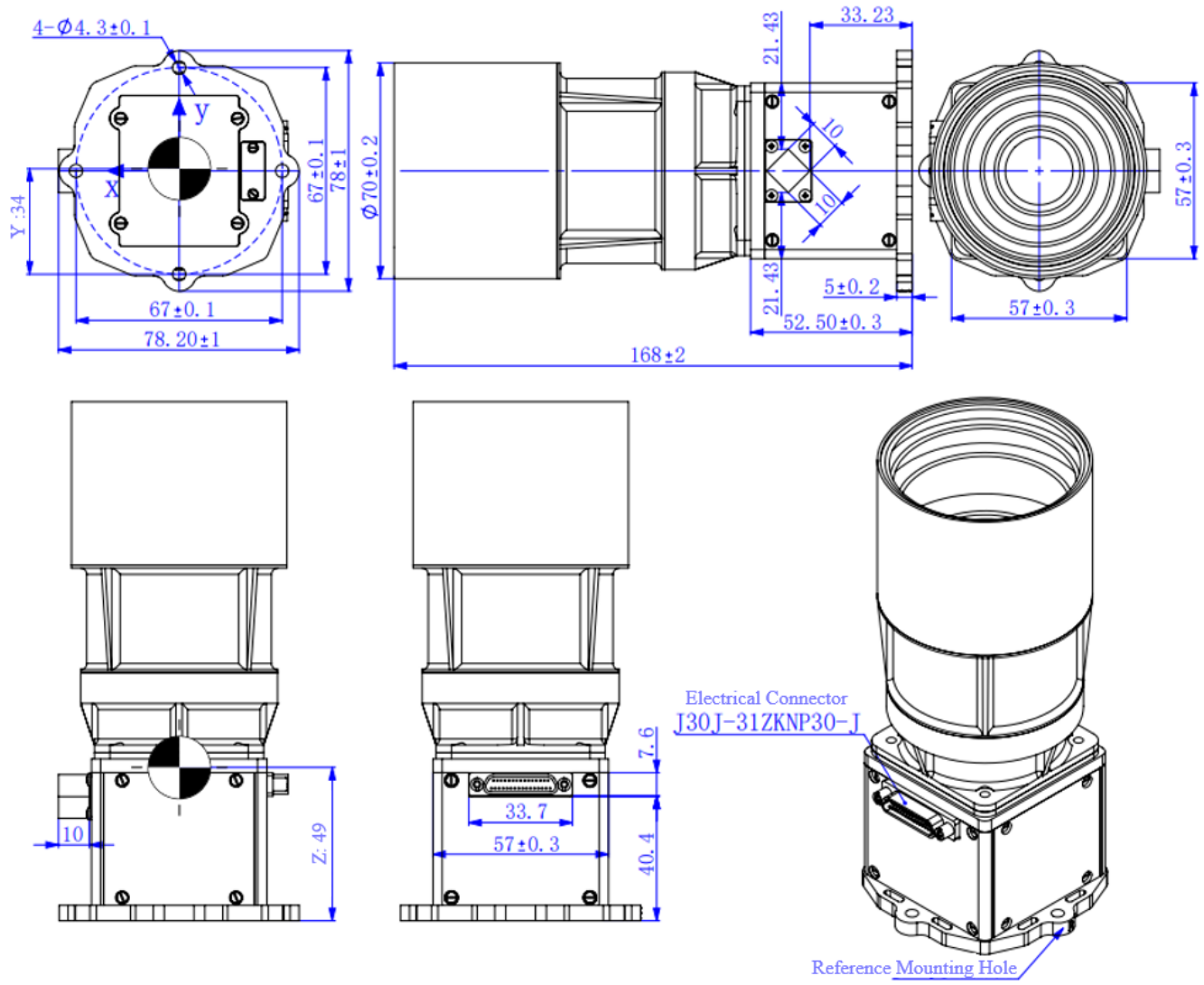

Note: This schematic diagram should include overall dimensions, mounting dimensions, mounting surface, mounting points (hole diameters and their tolerances, center-to-center distance and their tolerances), positional tolerances of guide pins and holes, orientation, position, type and designation of electrical connectors, operation holes required for calibration and testing, bonding jumpers/straps (position and length), and registration measurement datum.

Edited (Date):			
Signed (Date):	Mark		Signature, Date

IDS 4: Thermal Characteristics

	File Number	TYS-NST5S-A1-IDS	Page 4 of 13			
	Sub-System Name					
	Device Name	NST5S-A1 Star Tracker	Stage Mark			
	Device Code				FM	

Surface (Excluding Mounting Surface)	Material: Aluminum Alloy (2A12-T4)	Note: The inner surface of the baffle is ultra black coating. $\varepsilon_H \geq 0.85$, $\alpha_S \geq 0.96$
	Outer Surface Treatment: Conductive Treatment	
	Outer Surface Emissivity: $\varepsilon_H \geq 0.6$	
Start Temperature ℃: -30~+40		Heat Capacity J/K: 380
Operating Temperature Range ℃: -30~+40		Operating Relative Humidity Range: ≤60%
Best Operating Temperature Range ℃: 20±5		Storage Relative Humidity Range: ≤70%
Storage Temperature Range ℃: -30~+40		Power Consumption @Operating State W: 1.5±0.2 (Per Device) Power Consumption @Preparing State W: 0 (Per Device)

Description:

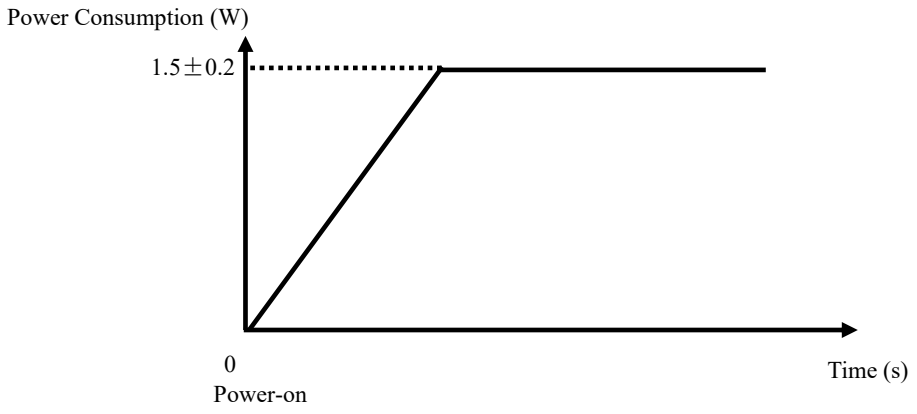

Edited (Date):			
Signed (Date):	Mark		Signature, Date

IDS 5: Thermal Diagram

	File Number	TYS-NST5S-A1-IDS	Page 5 of 13			
	Sub-System Name					
	Device Name	NST5S-A1 Star Tracker	Stage Mark			
	Device Code				FM	

Diagram:

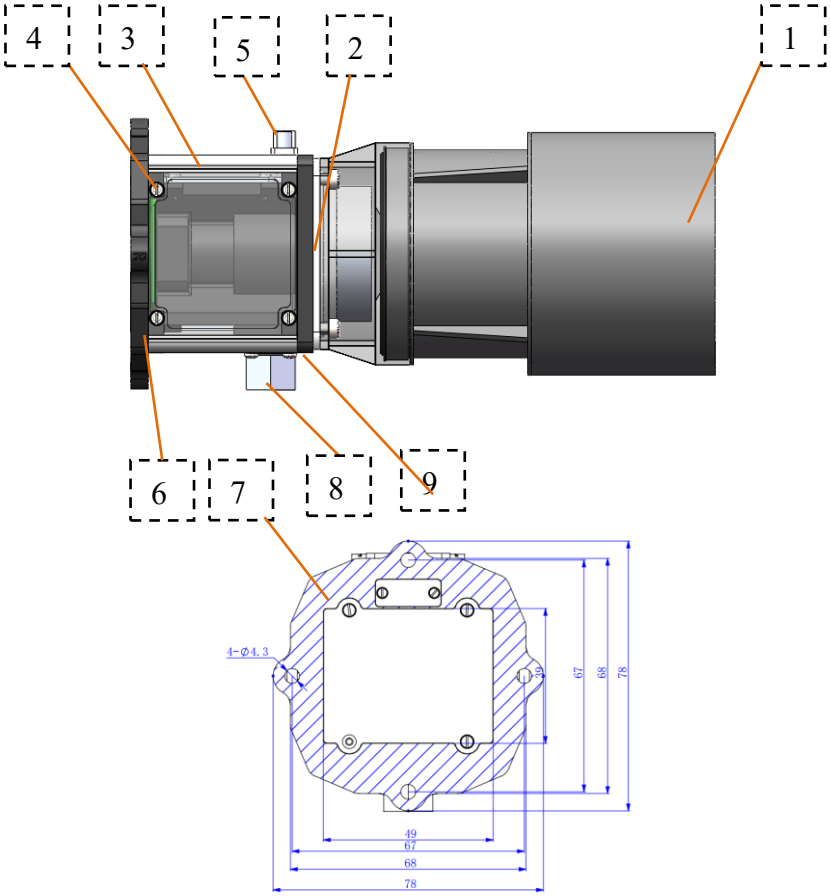

1—Baffle 2—Lens

3—Circuit Box 4—Power Supply & Image Processing Circuit Board

5—Connector 6—Image Sensor Circuit Board

7—Mounting Lug 8—Optical Prism

9—2mm Polyimide Thermal Insulation Spacer

Note: The installation of baffle and star tracker circuit box should be heat-isolation, the baffle communicated with the shell of star tracker circuit box through screws, meet the requirement of connection between metal components.

Edited (Date):			
Signed (Date):	Mark		Signature, Date

IDS 6: Power

		File Number	TYS-NST5S-A1-IDS	Page 6 of 13			
		Sub-System Name					
		Device Name	NST5S-A1 Star Tracker	Stage Mark			
		Device Code				FM	
Operating Mode (Long Term/Short Term / Other)		Long Term		Device Count			1
Voltage	Voltage Stability	Ripple Voltage	Inrush Current (Peak / Duration)	Power Consumption			
4.8-5.4V	/	100mV (p-p)	2A/5ms	1.5±0.2W			

Edited (Date):			
Signed (Date):	Mark		Signature, Date

IDS 7: Electrical Connector Contact Assignment – X1

		File Number		TYS-NST5S-A1-IDS	Page 7 of 13
		Sub-System Name			
		Device Name		NST5S-A1 Star Tracker	Stage Mark
		Device Code			FM
Name (by Function): X1		Electrical Connector P/N: J30J-31ZKNP30-J			Pin / Hole: Hole
Contact Number	Signal (Function) Description	Voltage/V	Current/A	Polarity	Remarks (Shielded / Twisted)
15,31	VIN5V	5V	0.3A	Power	Two-Point Two-Wire
14,30	GND	0V	0.3A	Power Ground	
3,19	TXD+	RS422 Standard	RS422 Standard	422 Transmit+	2,3 Twisted, 18,19 Twisted
2,18	TXD-			422 Transmit-	
5,21	RXD+	RS422 Standard	RS422 Standard	422 Receive+	4,5 Twisted, 20,21 Twisted
4,20	RXD-			422 Receive-	
17	PPS_H	RS422 Standard	RS422 Standard	PPS Receive+	1,17 Twisted
1	PPS_L			PPS Receive-	
16	KGND				Case Ground
6,7,8,9,10, 11,12,13,22, 23,24,25,26, 27,28,29					Internal Use

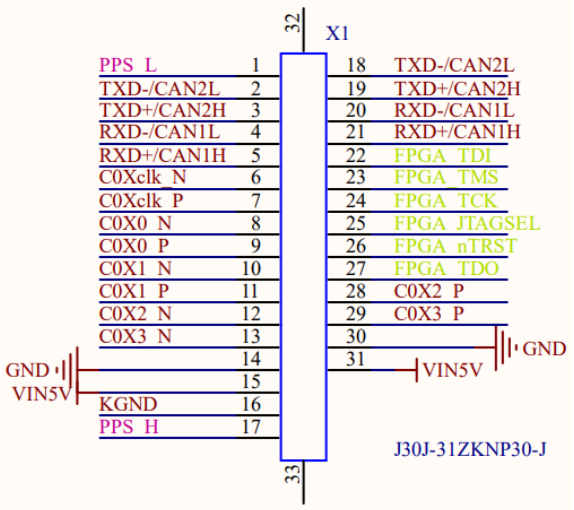

Edited (Date):			
Signed (Date):	Mark		Signature, Date

IDS 8: Electrical Interface Features - Power

	File Number	TYS-NST5S-A1-IDS	Page 8 of 13			
	Sub-System Name					
	Device Name	NST5S-A1 Star Tracker	Stage Mark			
	Device Code				FM	

Interface Signal	Power Supply
Signal Characteristics	5V power and the ground are two-point two-wire.
Interface Circuit	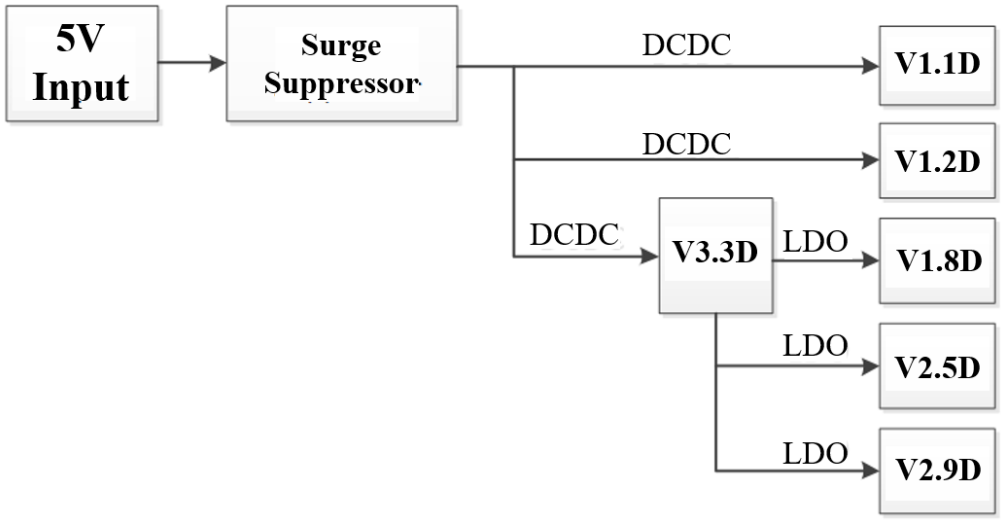
Notes	

Edited (Date):			
Signed (Date):	Mark		Signature, Date

IDS 9: Electrical Interface Features - RS422

	File Number	TYS-NST5S-A1-IDS	Page 9 of 13			
	Sub-System Name					
	Device Name	NST5S-A1 Star Tracker	Stage Mark			
	Device Code				FM	

Interface Signal	Digital Signal: RS422
Signal Characteristics	RS422 Communication Baud Rate: 115200bps; 1 start bit, 8 data bits (LSB first), 1 stop bit, odd parity; Communication Method: Two-point Two-wire
Interface Circuit	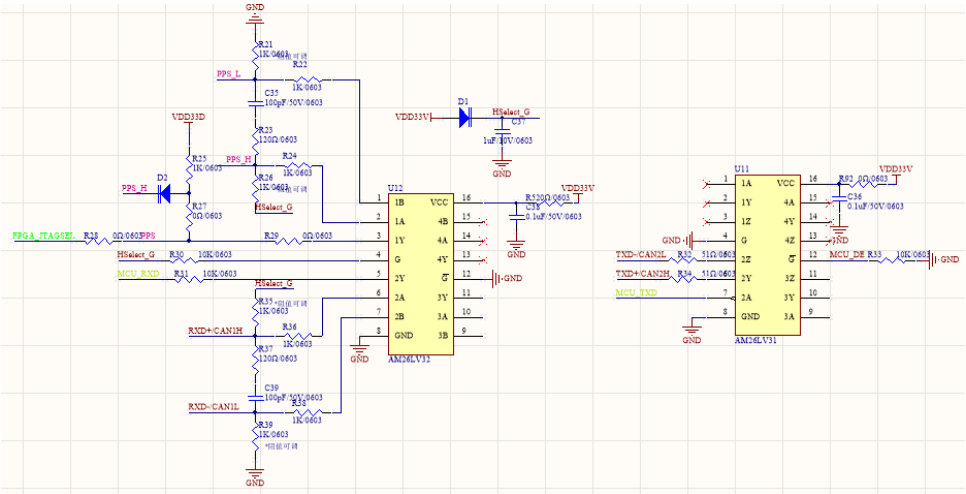
Notes	

Edited (Date):			
Signed (Date):	Mark		Signature, Date

IDS 10: Electrical Interface Features - Differential PPS

	File Number	TYS-NST5S-A1-IDS	Page 10 of 13			
	Sub-System Name					
	Device Name	NST5S-A1 Star Tracker	Stage Mark			
	Device Code				FM	

Interface Signal	Pulse Per Second (PPS)
Signal Characteristics	Second Pulse Signal: Differential Input; Falling Edge Aligned to Integer Seconds; Negative Pulse Width 1ms.
Interface Circuit	PPS circuit 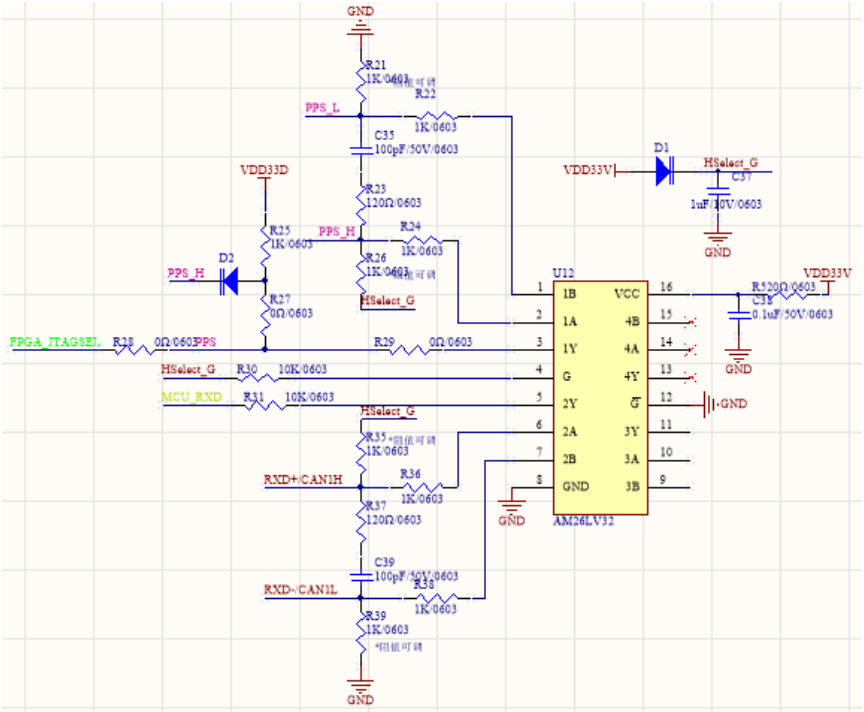
Notes	R25, R27, D2: not soldered @Differential PPS

Edited (Date):			
Signed (Date):	Mark		Signature, Date

IDS 11: Circuit and Interface Schematics

	File Number	TYS-NST5S-A1-IDS	Page 11 of 13			
	Sub-System Name					
	Device Name	NST5S-A1 Star Tracker	Stage Mark			
	Device Code				FM	

Schematic Diagram:

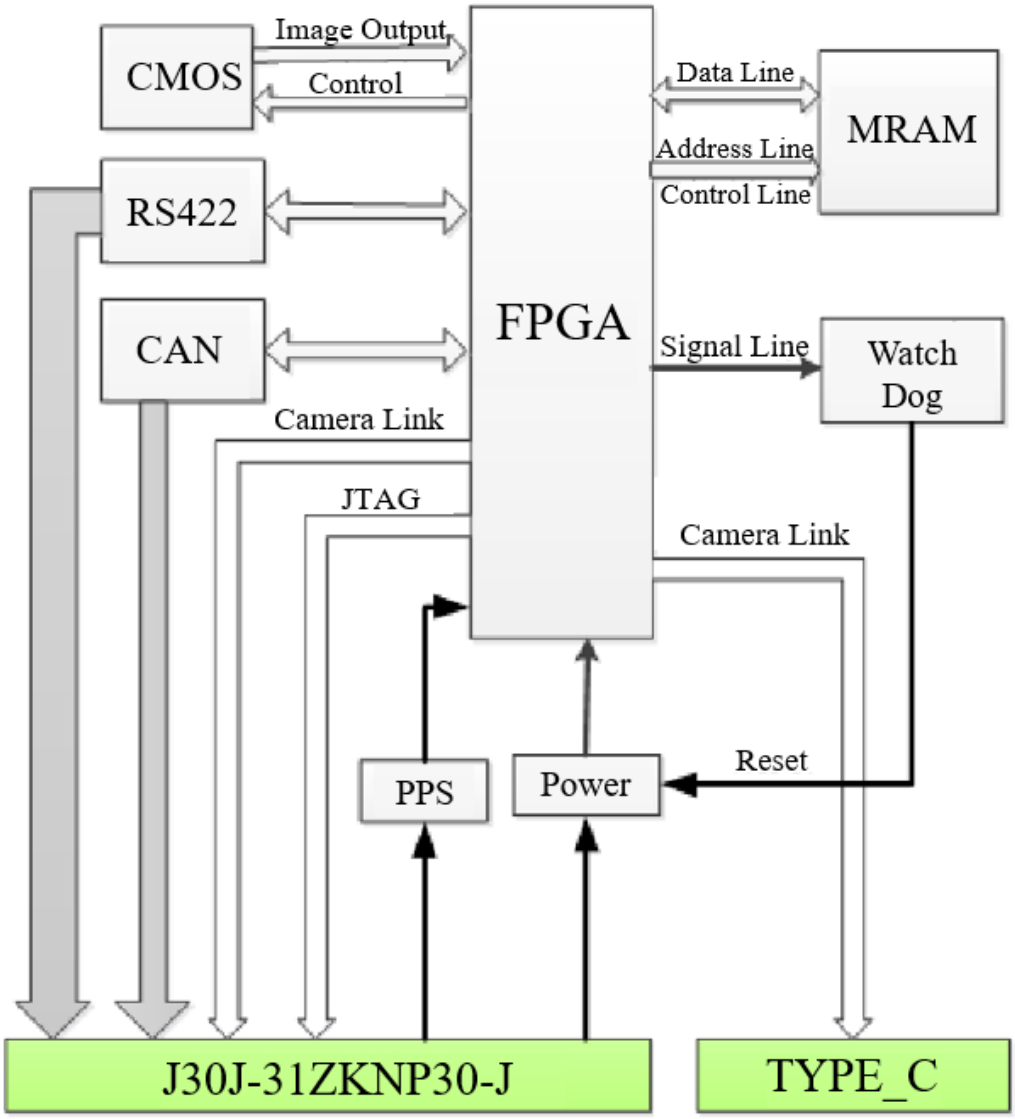

TYPE-C: Ground test interface, function reserved.

Edited (Date):			
Signed (Date):	Mark		Signature, Date

IDS 12: Mounting Requirements

	File Number	TYS-NST5S-A1-IDS	Page 12 of 13			
	Sub-System Name					
	Device Name	NST5S-A1 Star Tracker	Stage Mark			
	Device Code				FM	

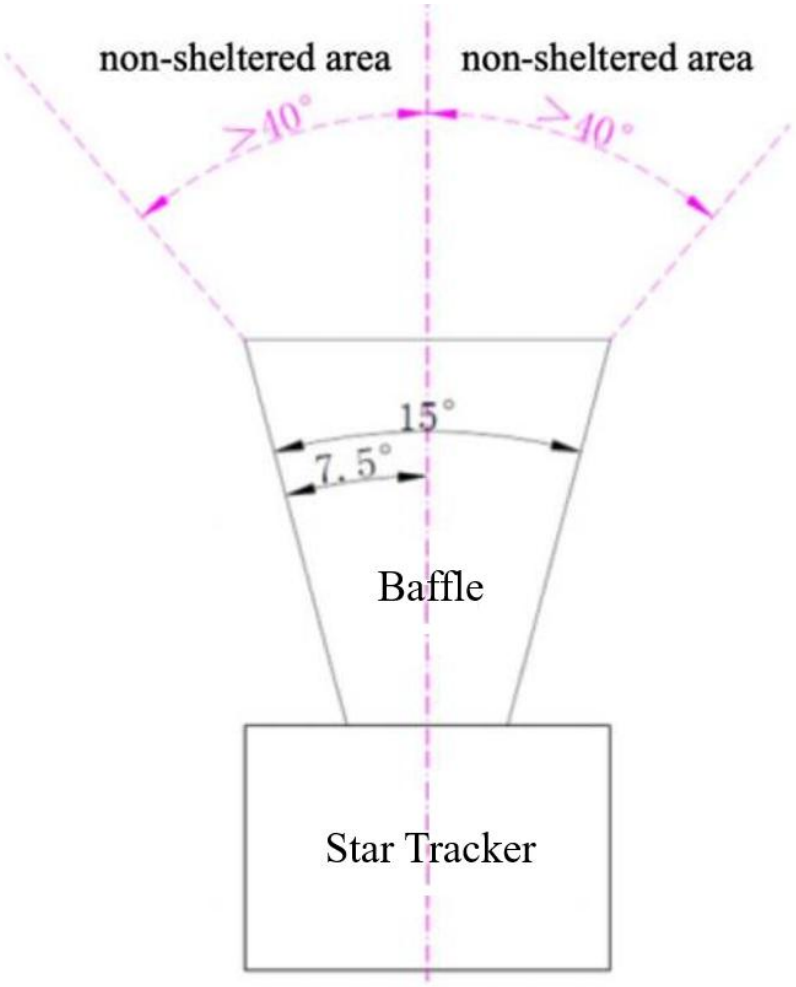

Mounting Requirements: Ensure that nothing sheltered in the field of view (no obstructions within the 80° cone from the top of the baffle).

Edited (Date):			
Signed (Date):	Mark		Signature, Date

IDS 13: Device Description

	File Number	TYS-NST5S-A1-IDS	Page 13 of 13			
	Sub-System Name					
	Device Name	NST5S-A1 Star Tracker	Stage Mark			
	Device Code				FM	

None.

Edited (Date):			
Signed (Date):	Mark		Signature, Date